Blohm **CHS 6423-A Standardsuper**

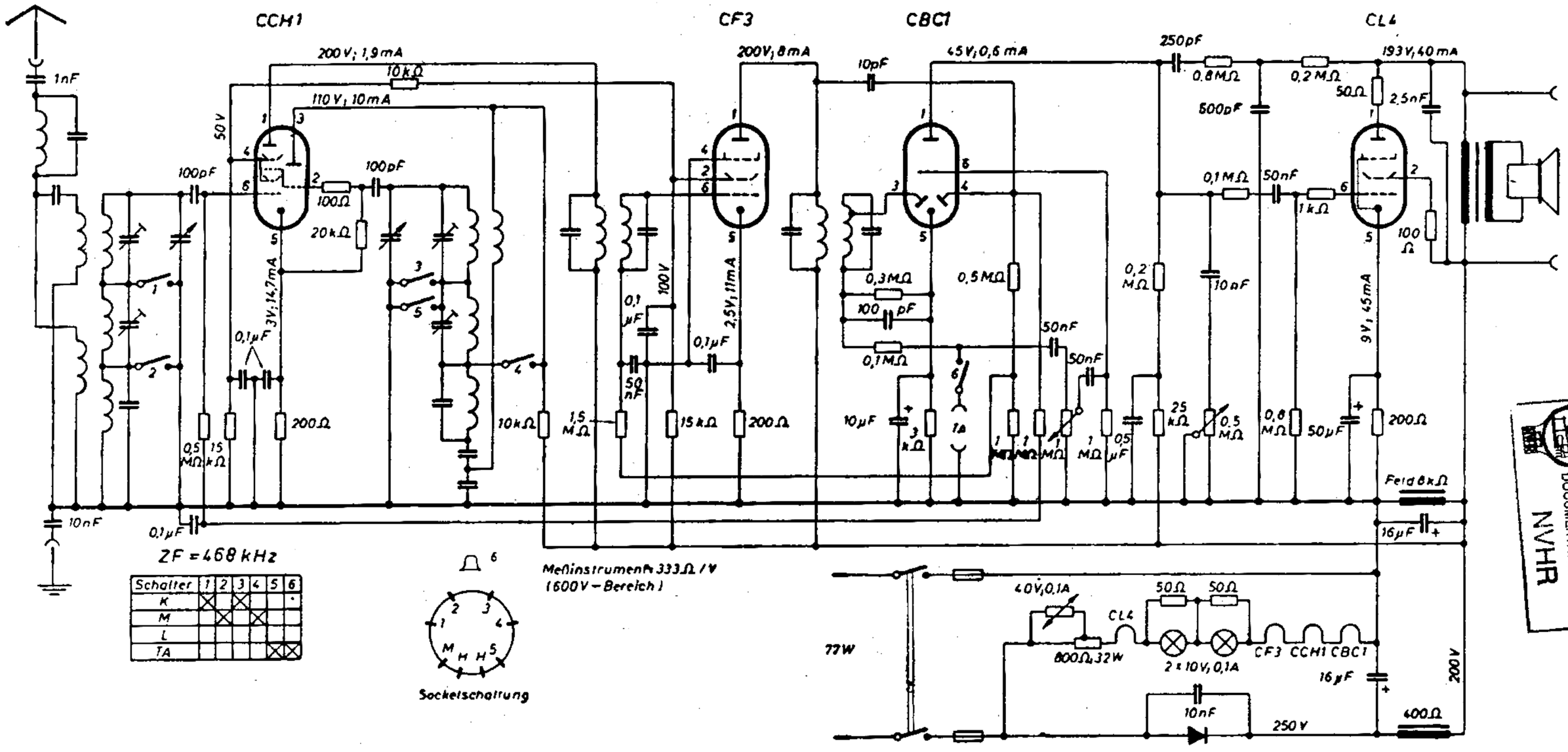

ARCHIEF
DOCUMENTATIEDIENST
NVHR

Ned. Ver. v. Historie v/d Radio